REVISIONS						
ZONE	LTR	DESCRIPTION	CHANGE No	DATE	BY	APPR'D
	D	REVISED & REDRAWN .275 GEAR WAS .250	64822	03FEB97	RMB	RGQ
6-C	E	E1 ADDED STAMPING INFO	64907	29APR98	TMS	RMB
4-E	F	F1 CHANGED FITTING	67438	14SEP01	RMB	MMcK
8-D	G	G1 REMOVED 40°±20°	68076	25JUN02	DRG	MMcK
5-C	H	H1 ADDED 520 LINE	68432	10JAN03	RMB	MMcK
** LETTER "I" NOT USED **						
5-C	J	J1 REMOVED PATENT NUMBERS	71352	12JUN08	DRG	BLM
6-C ---	K	K1 UPDATED STAMPING INFO K2 UPDATED DRAWING FORMAT	C'5018	01FEB18	SLK	BLM
5-D	L	L1 DBTC000302 MAGNETS WER 184-27	83671	24JUL23	JTK	MLM

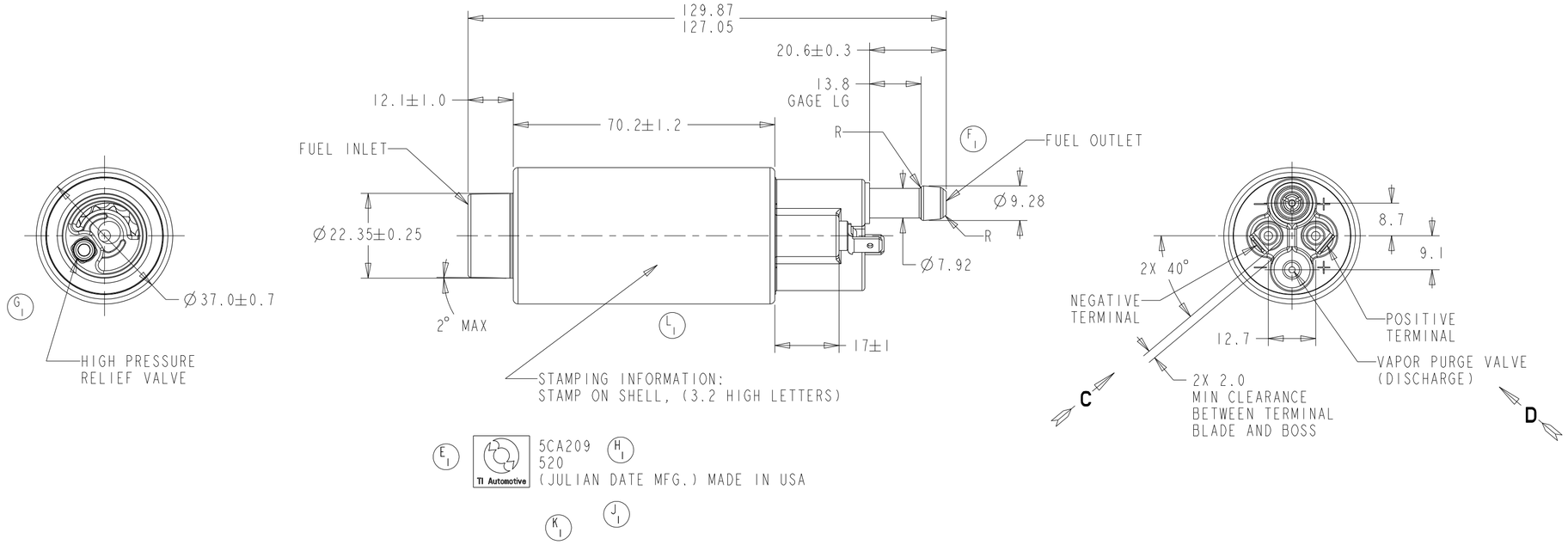

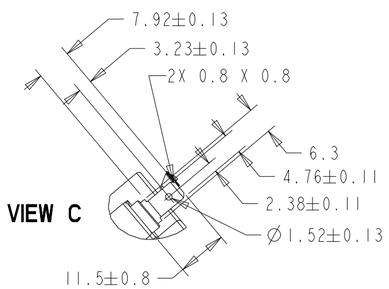

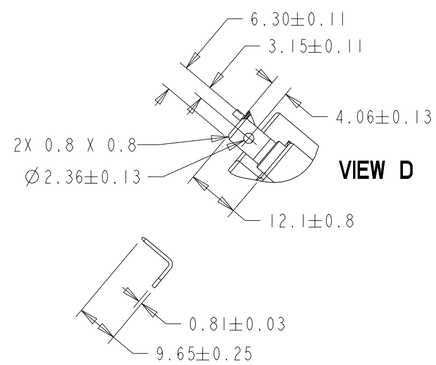

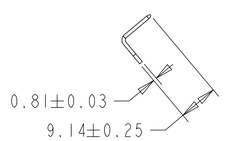

NOTE:

PUMP TO HAVE PLUG PROTECTORS FOR BOTH INLET AND OUTLET, AND BE IN A POLY-BAG

KEY PRODUCT CHARACTERISTICS

REFER TO TI AUTOMOTIVE GLOBAL ADVANCED QUALITY PLANNING DOCUMENT CW-4-ALL-411 FOR THE CLASSIFICATION AND CONTROL OF KEY PRODUCT CHARACTERISTICS

TYPE OF CHARACTERISTIC	SAFETY	REGULATORY	FUNCTION	FUNCTION PROCESS
	S SC	R SC	SC	SC KPC
NUMBER PER EACH CHARACTERISTIC	--	--	--	--
TOTAL NUMBER OF CHARACTERISTICS	--			

- TI AUTOMOTIVE CONFIDENTIAL AND PROPRIETARY -
THIS DRAWING IS PROPERTY OF TI AUTOMOTIVE. TI AUTOMOTIVE CLAIMS PROPIETARY RIGHTS IN THE SUBJECT MATTER SHOWN AND DESCRIBED ON THIS DRAWING AND RETAINS ALL INTELLECTUAL PROPERTY RIGHTS. THE DRAWING IS PROVIDED FOR REFERENCE PURPOSES ONLY AND ON THE EXPRESS CONDITION THAT IT WILL BE HELD IN CONFIDENCE. THIS DRAWING SHALL NOT BE DISCLOSED TO OTHERS OR USED FOR THE PURPOSE OF MANUFACTURE BY OR PROCUREMENT FROM OTHERS OF THE ARTICLE OR PART SHOWN WITHOUT TI AUTOMOTIVE'S EXPRESS WRITTEN CONSENT. NO LICENSE OR OTHER RIGHT IS GIVEN OR IMPLIED BY THE PROVISION OF THIS DRAWING TO RECIPIENT.
COPYRIGHT, TI AUTOMOTIVE 2018, ALL RIGHTS RESERVED.

METRIC
ALL DIMENSIONS ARE IN MILLIMETERS

DO NOT SCALE
DECIMAL TOLERANCES UNLESS OTHERWISE SPECIFIED
ONE PLACE ±0.25 TWO PLACE ±0.13 ANGLES ±1°

THIRD ANGLE PROJECTION

DIMENSIONS IN ACCORDANCE WITH ASME Y14.5 - 2009

TI Automotive
630 COLUMBIA ST.
CARO, MI 48723
+1 989.673.7727

ENGINEER:			MATERIAL/SPECIFICATION: SEE NOTES
DESIGNER:	SJR	27FEB1992	
CAD SYSTEM: PRO/E	SCALE: 1:1	SHEET NO. 1 OF 1	
REFERENCE ID/REV.: HJPX0209		2D PLM REFERENCE/REV.: 000005894/AF	
REFERENCE ID/REV.: 000007428/AE		3D PLM REFERENCE/REV.: AR0047632/AB	
DRAWING NAME: FUEL PUMP OUTLINE			
SIZE: A2	DRAWING NUMBER: 5CA209		